NOTE: SEE DETAIL STM-01.1 AND STM-01.2 FOR CASTING REQUIREMENTS.

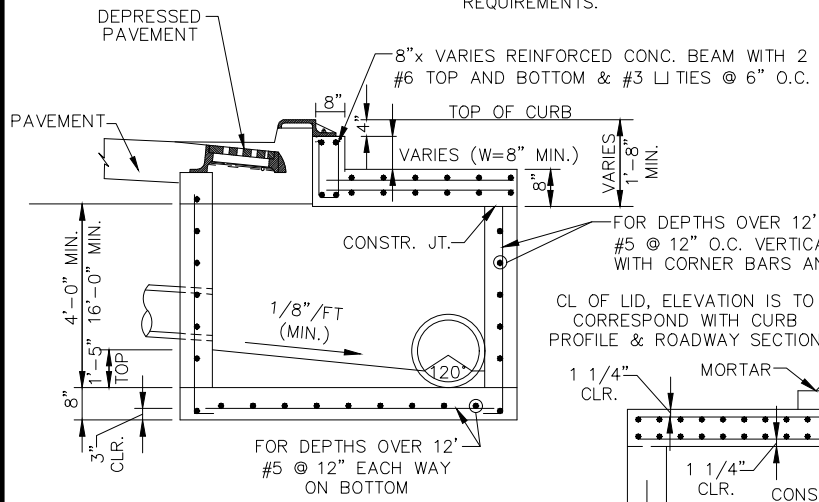

SECTION B-B

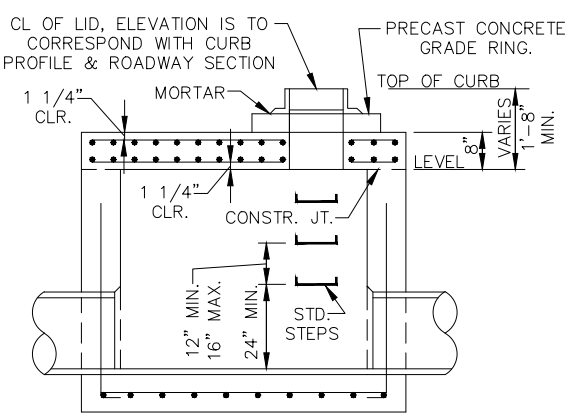

SECTION A-A

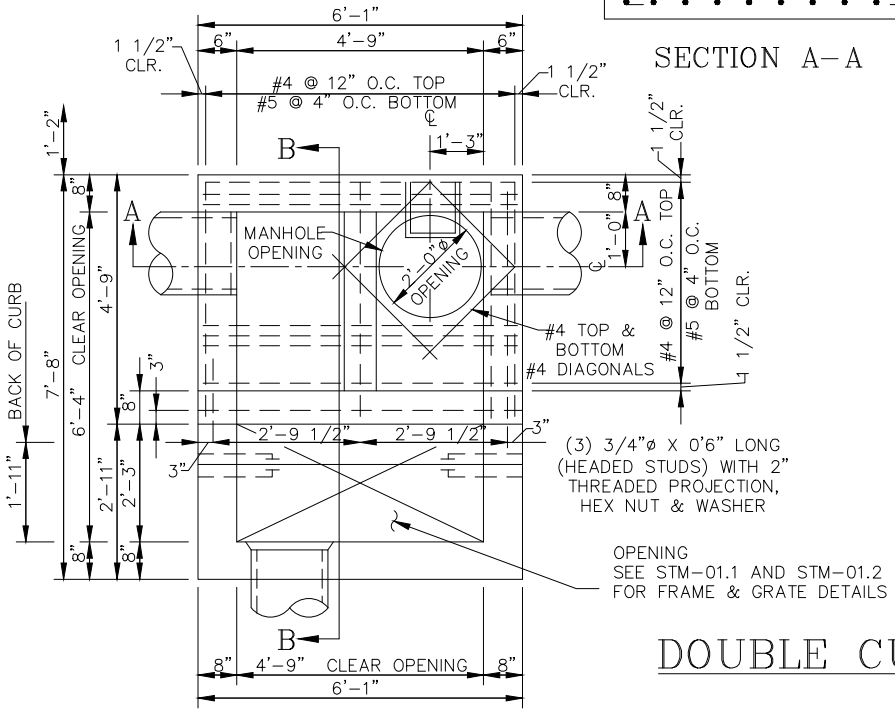

PLAN VIEW

CONCRETE SLAB: MAY BE PRECAST CONCRETE WITH LIFT HOLES. PROVIDE REINFORCEMENT AS SHOWN ON PLAN VIEW SECTION A-A & SECTION B-B

INLET CHAMBER: SHALL BE BUILT OF NON-REINFORCED CONCRETE FOR DEPTHS OF 12'-0" OR LESS. INLET CHAMBERS SHALL BE PRECAST CONCRETE OR CAST IN PLACE CONCRETE IN ACCORDANCE WITH SD1'S CURRENT SPECIFICATIONS FOR DEPTHS GREATER THAN 12'-0". REINFORCEMENT SHALL BE IN ACCORDANCE WITH DETAIL.

PAVEMENT DETAILS: SHALL BE IN ACCORDANCE WITH AGENCY HAVING JURISDICTION.

STANDARD GRATES AND CASTINGS: SHALL BE IN ACCORDANCE WITH STM-01.1 AND STM-01.2. MANHOLE CASTINGS SHALL BE PER SD1 CURRENT SPECIFICATIONS.

BRICK OR MASONRY UNITS: SIDE WALLS WHEN USED IN PLACE OF CONCRETE SHALL BE 8" NORMAL THHICKNESS.

PRECAST CONSTRUCTION: IS PERMITTED. CONCRETE SHALL MEET REQUIREMENTS OF SD1'S CURRENT SPECIFICATIONS. PRECAST CONCRETE WALLS SHALL HAVE A MINIMUM THICKNESS OF 6" AND REINFORCEMENT SHALL BE SUFFICIENT TO PERMIT SHIPPING AND PLACEMENT WITHOUT DAMAGE. HOWEVER, PRECAST CONCRETE SLABS SHALL BE AS SHOWN HEREON.

BASE: MAY BE PRECAST MONOLITHIC WITH THE WALLS. A PERMISSIBLE ALTERNATE IS TO CAST AND SHIP THE BASE AND WALLS SEPARATELY. OPENINGS FOR INLET AND OUTLET PIPES SHALL BE PROVIDED EITHER WHEN THE UNIT IS CAST OR LATER, TO MEET FIELD CONDITIONS. BOTTOM CHANNELS MAY BE FORMED OF CONCRETE PRECAST IN THE BASE OR BY FIELD CONSTRUCTION.

DOUBLE CURB INLET WITH MANHOLE (STM-04)

N.T.S.

(REFERENCE -HAMILTON CO. OH CB3-MH, ODOT CB-3, & ODOT MH-1)

REVISION	BY	DATE

SANITATION DISTRICT NO. 1
1045 Eaton Drive
FT. Wright, Kentucky 41017
Ph: (859) 578-7460
Fax: (859) 331-2436

DATE: SEPTEMBER 2018

STANDARD DRAWING NO: STM-04