REVISION	BY	DATE

MARK	SIZE	NO (1)	LGTH FT	LGTH IN	K FT	K IN
102''						
A1	5	2	12	9		
A2	5	2	23	4		
B1	5	4	4	3		
B2	5	4	4	9		
B3	5	4	5	4		
B4	5	4	5	10		
B5	5	4	6	4		
B6	5	4	6	11		
B7	5	4	7	5		
B8	5	4	8	0		
B9	5	4	8	6		
B10	5	4	9	0		
B11	5	34	9	7		
C1	4	2	19	0		
C2	4	2	22	9		
C3	4	2	26	5		
C4	4	2	30	0		
C5	4	2	34	0		
C6	4	8	37	3		
E1	5	2	24	9	19	9
E2	5	2	25	2	20	2
F	4	20	1	9	0	6
G1	4	1	20	6		
G2	4	3	24	0		
G3	4	3	29	0		
G4	4	3	35	0		
G5	4	3	39	6		
H	4	21	14	5	11	9
J1	5	4	4	3		
J2	5	4	5	4		
J3	5	4	6	4		
J4	5	4	7	5		
J5	5	4	8	5		
J6	5	4	9	5		
K1	4	2	2	0		
K2	4	2	4	0		
K3	4	2	6	0		
K4	4	2	8	0		
K5	4	2	10	0		
K6	4	8	11	6		
M	4	49	4	9		
N1	4	8	11	6		
N2	4	8	37	3		
P	7	49	7	0	4	9
Q	5	4	9	9		
R	5	10	3	5		
S1	5	4	2	6		
S2	5	4	5	3		
S3	5	4	8	6		
S4	5	4	10	6		

MARK	SIZE	NO (1)	LGTH FT	LGTH IN	K FT	K IN
102'' (CONTINUED)						
S5	5	4	13	6		
T1	5	4	2	9		
T2	5	4	4	3		
T3	5	4	5	3		
T4	5	4	6	6		
T5	5	4	8	6		
T6	5	4	9	6		
108''						
A1	5	2	13	7		
A2	5	2	24	3		
B1	5	4	4	5		
B2	5	4	5	0		
B3	5	4	5	5		
B4	5	4	6	0		
B5	5	4	6	6		
B6	5	4	7	1		
B7	5	4	7	7		
B8	5	4	8	2		
B9	5	4	8	8		
B10	5	4	9	3		
B11	5	4	9	9		
B12	5	34	10	3		
C1	4	2	18	2		
C2	4	2	22	1		
C3	4	2	25	5		
C4	4	2	29	3		
C5	4	2	33	0		
C6	4	2	36	7		
C7	4	8	39	2		
E1	5	2	25	7	20	7
E2	5	2	26	2	21	2
F	4	21	1	9	0	6
G1	4	1	19	9		
G2	4	3	25	8		
G3	4	3	31	10		
G4	4	3	37	9		
G5	4	3	41	9		
H	4	21	15	1	12	5
J1	5	4	4	6		
J2	5	4	5	7		
J3	5	4	6	7		
J4	5	4	7	6		
J5	5	4	8	7		
J6	5	4	9	7		
K1	4	2	2	11		
K2	4	2	4	11		
K3	4	2	6	10		

MARK	SIZE	NO (1)	LGTH FT	LGTH IN	K FT	K IN
108'' (CONTINUED)						
K4	4	2	8	11		
K5	4	2	10	9		
K6	4	8	12	0		
M	4	51	4	9		
N1	4	8	16	0		
N2	4	8	44	0		
P	7	51	7	3	5	0
Q	5	4	10	4		
R	5	10	3	5		
S1	5	4	3	5		
S2	5	4	6	0		
S3	5	4	8	6		
S4	5	4	11	6		
S5	5	4	13	6		
T1	5	4	2	3		
T2	5	4	3	6		
T3	5	4	5	0		
T4	5	4	6	3		
T5	5	4	7	9		
T6	5	4	9	3		
T7	5	4	10	3		

NOTES

1. NUMBER OF BARS IN ONE HEADWALL.
2. DIMENSIONS ARE O. TO O. OF BARS.
3. ALL BARS ARE STRAIGHT EXCEPT THOSE SHOWN BELOW.

BENT BAR SHAPES

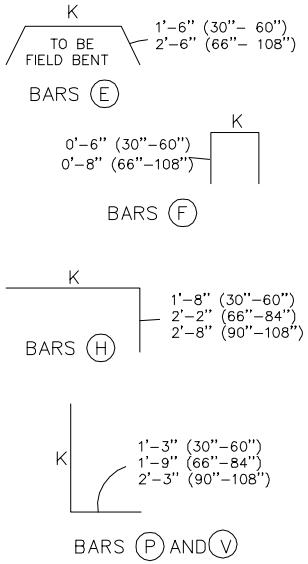

USE WITH CURRENT SD#1 STANDARD DRAWINGS NOS. STM 18.1 THRU 18.11

BILL OF REINFORCEMENT
HEADWALLS
(102" TO 108" DIAMETER CIRCULAR PIPE)
45° SKEW
(STM-18.12)

(REFERENCE KYTC STANDARD DRAWING RDH-344)

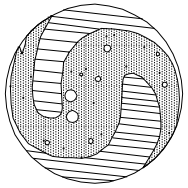

SANITATION DISTRICT NO. 1
1045 Eaton Drive
FT. Wright, Kentucky 41017
Ph: (859) 578-7460
Fax: (859) 331-2436

STANDARD DRAWING NO: STM-18.12

DATE: MAY 2010