REVISION	BY	DATE

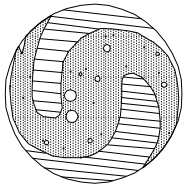

SANITATION DISTRICT NO. 1
1045 Eaton Drive
Ft. Wright, Kentucky 41017
Ph: (859) 578-7460
Fax: (859) 331-2436

MARK	SIZE	NO ①	LGTH FT	LGTH IN	K FT	K IN
78"						
A1	5	2	10	3		
A2	5	2	11	3		
B1	5	4	3	4		
B2	5	4	4	3		
B3	5	4	5	3		
B4	5	4	6	2		
B5	5	4	7	1		
B6	5	6	7	7		
C1	4	2	4	11		
C2	4	2	7	0		
C3	4	2	9	1		
C4	4	2	11	3		
C5	4	6	13	1		
E1	5	2	14	0	9	0
E2	5	2	14	6	9	6
F	4	9	1	9	0	6
G1	4	2	8	5		
G2	4	3	10	11		
G3	4	3	13	5		
G4	4	3	15	2		
H	4	8	11	9	9	7
J1	5	4	3	4		
J2	5	4	4	4		
J3	5	4	5	5		
J4	5	4	6	5		
J5	5	2	7	7		
K1	4	2	1	9		
K2	4	2	3	8		
K3	4	2	5	7		
K4	4	2	7	5		
K5	4	6	9	1		
M	4	22	3	9		
N1	4	7	9	0		
N2	4	7	13	0		
P	5	22	5	6	3	9
Q	5	3	7	5		
R	5	8	2	8		
S1	5	8	1	3		
S2	5	6	2	3		
T1	5	2	2	3		
T2	5	4	7	0		

MARK	SIZE	NO ①	LGTH FT	LGTH IN	K FT	K IN
84"						
A1	5	2	10	11		
A2	5	2	12	0		
B1	5	4	3	7		
B2	5	4	4	6		
B3	5	4	5	6		
B4	5	4	6	5		
B5	5	4	7	4		
B6	5	8	8	2		
C1	4	2	4	1		
C2	4	2	6	3		
C3	4	2	8	4		
C4	4	2	10	6		
C5	4	2	12	6		
C6	4	6	13	11		
E1	5	2	14	8	9	8
E2	5	2	15	1	10	1
F	4	10	1	9	0	6
G1	4	2	9	8		
G2	4	3	12	1		
G3	4	3	14	9		
G4	4	3	16	7		
H	4	8	12	4	10	2
J1	5	4	3	7		
J2	5	4	4	7		
J3	5	4	5	8		
J4	5	4	6	9		
J5	5	4	7	9		
K1	4	2	2	9		
K2	4	2	4	8		
K3	4	2	6	7		
K4	4	2	8	6		
K5	4	6	9	8		
M	4	24	3	9		
N1	4	7	9	9		
N2	4	7	14	0		
P	5	24	5	9	4	0
Q	5	3	8	0		
R	5	8	2	10		
S1	5	10	1	3		
S2	5	6	2	3		
T1	5	2	2	3		
T2	5	4	7	6		

MARK	SIZE	NO ①	LGTH FT	LGTH IN	K FT	K IN
90"						
A1	5	2	11	7		
A2	5	2	12	9		
B1	5	4	3	10		
B2	5	4	4	9		
B3	5	4	5	8		
B4	5	4	6	7		
B5	5	4	7	7		
B6	5	10	8	6		
C1	4	2	5	6		
C2	4	2	7	7		
C3	4	2	9	9		
C4	4	2	11	11		
C5	4	2	14	0		
C6	4	6	14	9		
E1	5	2	15	3	10	3
E2	5	2	15	9	10	9
F	4	11	1	9	0	6
G1	4	3	10	9		
G2	4	3	13	3		
G3	4	3	15	9		
G4	4	3	17	6		
H	4	9	13	6	10	10
J1	5	4	3	10		
J2	5	4	4	11		
J3	5	4	5	11		
J4	5	4	7	0		
J5	5	4	8	0		
K1	4	2	2	0		
K2	4	2	3	11		
K3	4	2	5	10		
K4	4	2	7	9		
K5	4	2	9	8		
K6	4	6	10	3		
M	4	26	4	9		
N1	4	8	10	3		
N2	4	8	14	10		
P	6	26	6	6	4	3
Q	5	4	8	7		
R	5	9	3	3		
S1	5	8	1	3		
S2	5	8	2	6		
T1	5	2	3	3		
T2	5	4	8	3		

MARK	SIZE	NO ①	LGTH FT	LGTH IN	K FT	K IN
96"						
A1	5	2	12	4		
A2	5	2	13	5		
B1	5	4	4	1		
B2	5	4	5	0		
B3	5	4	5	11		
B4	5	4	6	10		
B5	5	4	7	9		
B6	5	4	8	9		
B7	5	8	9	3		
C1	4	2	4	7		
C2	4	2	6	10		
C3	4	2	8	11		
C4	4	2	11	2		
C5	4	2	13	2		
C6	4	2	15	5		
C7	4	6	15	7		
E1	5	2	15	11	10	11
E2	5	2	16	4	11	4
F	4	11	1	9	0	6
G1	4	3	11	9		
G2	4	3	14	4		
G3	4	3	16	10		
G4	4	3	18	6		
H	4	10	14	0	11	4
J1	5	4	4	1		
J2	5	4	5	2		
J3	5	4	6	2		
J4	5	4	7	3		
J5	5	4	8	3		
J6	5	2	9	3		
K1	4	2	3	1		
K2	4	2	5	0		
K3	4	2	6	11		
K4	4	2	8	9		
K5	4	2	10	8		
K6	4	6	10	10		
M	4	27	4	9		
N1	4	8	10	11		
N2	4	8	15	8		
P	6	27	6	9	4	6
Q	5	4	9	2		
R	5	9	3	5		
S1	5	10	1	3		
S2	5	8	2	9		
T1	5	2	3	3		
T2	5	4	8	9		

MARK	SIZE	NO ①	LGTH FT	LGTH IN	K FT	K IN
102"						
A1	5	2	12	10		
A2	5	2	14	0		
B1	5	4	4	3		
B2	5	4	5	3		
B3	5	4	6	2		
B4	5	4	7	1		
B5	5	4	8	0		
B6	5	4	8	11		
B7	5	10	9	10		
C1	4	2	6	1		
C2	4	2	8	3		
C3	4	2	10	4		
C4	4	2	12	6		
C5	4	2	14	8		
C6	4	8	16	6		
E1	5	2	16	7	11	7
E2	5	2	17	0	12	0
F	4	12	1	9	0	6
G1	4	1	10	6		
G2	4	3	13	1		
G3	4	3	15	7		
G4	4	3	18	2		
G5	4	3	19	10		
H	4	10	14	8	12	0
J1	5	4	4	4		
J2	5	4	5	4		
J3	5	4	6	4		
J4	5	4	7	5		
J5	5	4	8	5		
J6	5	4	9	6		
K1	4	2	2	1		
K2	4	2	4	0		
K3	4	2	6	0		
K4	4	2	7	11		
K5	4	2	9	10		
K6	4	8	11	6		
M	4	29	4	9		
N1	4	8	12	1		
N2	4	8	16	7		
P	7	29	7	0	4	9
Q	5	4	9	9		
R	5	10	3	5		
S1	5	10	1	6		
S2	5	8	2	9		
T1	5	2	4	0		
T2	5	4	9	3		

MARK	SIZE	NO ①	LGTH FT	LGTH IN	K FT	K IN
108"						
A1	5	2	13	7		
A2	5	2	14	11		
B1	5	4	4	7		
B2	5	4	5	6		
B3	5	4	6	5		
B4	5	4	7	4		
B5	5	4	8	4		
B6	5	4	9	3		
B7	5	12	10	2		
C1	4	2	5	4		
C2	4	2	7	6		
C3	4	2	9	7		
C4	4	2	11	9		
C5	4	2	13	10		
C6	4	2	16	0		
C7	4	8	17	4		
E1	5	2	17	3	12	3
E2	5	2	17	8	12	8
F	4	13	1	9	0	6
G1	4	1	11	8		
G2	4	3	14	2		
G3	4	3	16	8		
G4	4	3	19	2		
G5	4	3	20	11		
H	4	11	15	2	12	6
J1	5	4	4	7		
J2	5	4	5	7		
J3	5	4	6	8		
J4	5	4	7	9		
J5	5	4	8	9		
J6	5	4	9	10		
K1	4	2	3	3		
K2	4	2	5	2		
K3	4	2	7	1		
K4	4	2	9	0		
K5	4	2	10	11		
K6	4	8	12	1		
M	4	30	4	9		
N1	4	8	12	2		
N2	4	8	17	4		
P	7	30	7	3	5	
Q	5	4	10	4		
R	5	10	3	5		
S1	5	10	1	6		
S2	5	8	2	9		
T1	5	2	4	0		
T2	5	4	10	0		

NOTES

1. ① NUMBER OF BARS IN ONE HEADWALL.
2. DIMENSIONS ARE O. TO O. OF BARS.
3. ALL BARS ARE STRAIGHT EXCEPT THOSE SHOWN BELOW.

BENT BAR SHAPES

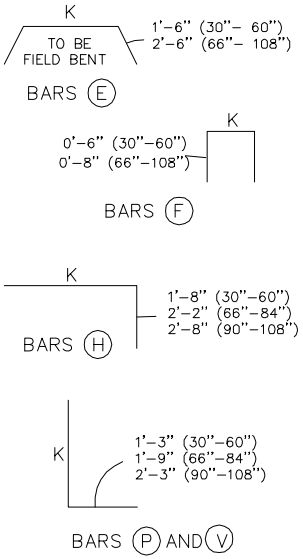

USE WITH CURRENT SD#1 STANDARD DRAWINGS NOS. STM 18.1 THRU 18.5 & 18.7 THRU 18.12

BILL OF REINFORCEMENT HEADWALLS (78"-108" DIAMETER CIRCULAR PIPE) - 15° SKEW

(STM-18.6)

N.T.S.

(REFERENCE KYTC STANDARD DRAWING RDH-322)

DATE: AUG 2009

STANDARD DRAWING NO: STM-18.6